Manufactured with superior quality and exceptional value, SINOLIFT electric pallet trucks are support by an extensive dealer and field support network located throughout the world. Don't forget to ask your local SINOLIFT dealer about details on factory retail programs, financing plans and additional options and dealer services like planned maintenance and operator training.

Manufacturer			**SINOLIFT**		
Model			**EPT15**	**EPT18**	**EPT20**
Power Type			Lithium Battery	Lithium Battery	Lithium Battery
Type of Operation			Pedestrian	Pedestrian	Pedestrian
Load capacity/Rated load	q	kg	1500	1800	2000
Load Center Distance	c	mm	600	600	650
Alex centre to Fork Face	x	mm	950(1020)	950(1020)	950(1020)
Wheelbase	y	mm	1220(1295)	1220(1295)	1220(1295)
Total Weight (with battery)		kg	148(153)	155(160)	158(163)
Tyre Type			Polyurethane	Polyurethane	Polyurethane
Tyre Size (Load Wheel) Tandem		mm	φ80x70(85mm) or φ74x70(75mm)	φ80x70(85mm) or φ74x70(75mm)	φ80x70(85mm) or φ74x70(75mm)
Tyre Size (Load Wheel) Single			φ80x93(85mm) or φ74x93(75mm)	φ80x93(85mm) or φ74x93(75mm)	φ80x93(85mm) or φ74x93(75mm)
Tyre Size (Drive Wheel)		mm	φ210x70	φ210x70	φ190x70
Tyre Size (Caster Wheel)		mm	φ70x36	φ70x36	φ70x36
Wheels Quantity, front/rear (x=Driving Wheels)			4/1x+2	4/1x+2	4/1x+2
Track Width,Front,Driving Side	b10	mm	460	460	460
Track Width,Rear,Loading Side	b11	mm	400(520)	400(520)	400(520)
Lifting Height	h3	mm	190(200)	190(200)	190(200)
Height of Tiller Arm in Driving Position, Min.- Max.	h14	mm	600-1220	600-1220	680-1200
Lowered Height	h13	mm	75(85)	75(85)	75(85)
Overall Length	l1	mm	1540(1610)	1540(1610)	1540(1610)
Length to Fork Face	l2	mm	390	390	390
Overall Width	b1	mm	560(680)	560(680)	560(680)
Fork Dimension	s/e/l	mm	50x160x1150(1220)	50x160x1150(1220)	54x160x1150(1220)
Fork Spread Width	b5	mm	560/680	560/680	560/680
Ground Clearance at Center of Wheelbase (Min)	m2	mm	30	30	42
Aisle Width for Pallets 1000x1200 Crossways	Ast	mm	1790	1790	1790
Aisle Width for Pallets 800x1200 Crossways	Ast	mm	1740	1740	1740
Turning Radius	Wa	mm	1350	1350	1350
Traveling Speed (Laden/Unladen)		km/h	4.5/4	4.5/4	4.5/4
Lifting Speed (Laden/Unladen)		mm/s	22/17	22/17	15/28
Lowering Speed (Laden/Unladen)		mm/s	26/30	26/30	35/26
Max.Gradient Performance (Laden/Unladen)		%	5/7	5/7	6/15
Service Brake Type			Electromagnetic	Electromagnetic	Electromagnetic
Driving Motor Rating (DC) S2 60min		kw	0.75	0.75	0.85
Lifting Motor Rating S3 15%		kw	0.5	0.5	0.6
Battery Type			Li-ion	Li-ion	Li-ion
Battery Voltage/Capacity K5		V/Ah	24/25	24/25	48/15(20Ah 30Ah option)
Battery Weight		kg	5	5	6(6.5kg 7kg)
Charger		V/A	24/10	24/10	48/6
Controller Model			DC CURTIS	DC CURTIS	DC CURTIS
Steering Type			Mechanical	Mechanical	Mechanical
Sound level atdriver's ear according to EN 12 053		dB(A)	70	70	70

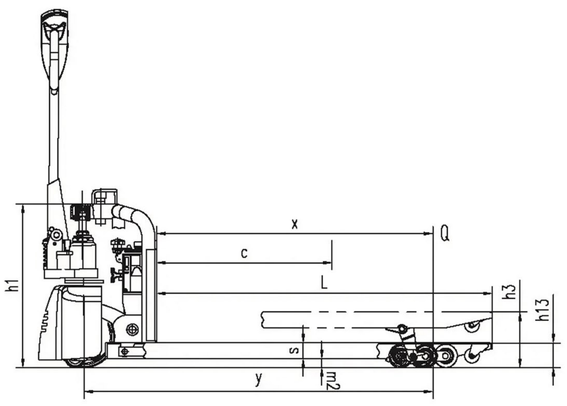

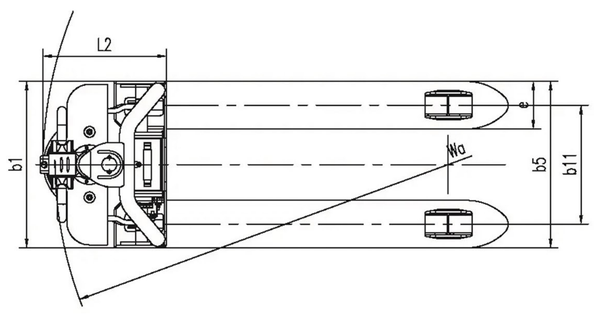

Spercial size of width and length can be made according to customer's requirement, All specifications and figures are subject to change withou notice for improvement.

SINOLIFT
For material handling

EPT15 EPT18 EPT20

LITHIUM BATTERY OPERATED PALLET TRUCK

ISO9001

CE

SHANGHAI SINOLIFT MECHANICAL AND ELECTRICAL EQUIPMENT CO., LTD

ADDRESS: No. 2471 Dachuan Road, Nanhui Industry Park, Pudong New District, Shanghai, 201399,P.R. China

Tel: 0086-21-68014500 or 0086-21-58003681

Fax: 0086-21-68014262

Website: www.sinolift.com www.sinoliftchina.com

Skype: sinolift

Whatsapp & Mobile: 0086 138 1757 2420

Premium Features

- Horn and Emergency Stop
- Forwards & Back Buttons
- Turtle & Creep Speed Switch
- Tandem Roller Wheels

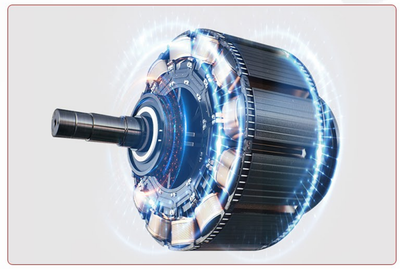

48V 850-Watt Big drive motor for efficiency and high torque.

Easy click ON/OFF
Lithum battery (no tools required)

SINOLIFT is setting new benchmarks in pallet truck productivity and efficiency with the EPT15/18/20: No need for a hand pallet truck anymore – with a lifting capacity of up to 2,000 kg /4,400 lbs, heavy loads can be transported fatigue-free with the EPT15/18/20. Electric lifting and driving noticeably relieves stress on the operator, just as the ergonomic design of the tiller head enables a natural hand position during operation. The compact low lift pallet truck is powered by innovative Li-Ion technology, which is particularly maintenance free and reliable. The Li-Ion battery is very easy to change and can be easily inserted into the forklift truck for ultimate availability.

Similar dimensions as HPT

Speed reduction when cornering

The perfect alternative to a hand Pallet Truck - affordable & efficient!

It combines the features of a powered pallet truck with the flexibility of a hand pallet truck

PERFORMANCE
- Capacity 2000 kg
- Maintenance free Lithium battery
- Electric lifting and lowering
- Electric top stop
- Slow speed mode (Turtle function)
- LCD display - battery indicator, operating hour, error codes
- Keyless - integrated pincode panel

SAFETY
- Emergency button, horn
- Feet protection
- Stability wheels and entry rollers

UTILISATION OF SPACE
- Small battery dimensions enable compact truck
- Operates with the handle upright

FACTS LITHIUM BATTERY
- Maintenance free
- 48V/15Ah
- Battery weight only 6kg
- Very easy and fast to exchange battery (within two seconds)
- Fast charging - only 2.5 hours (inboard as well as outboard)
- Long operational time between charges (high number of battery cycles)

Ergonomics Designed Handle
Smart, Compact and confortable
Integrated handle integrates key and meter make the operation easy and comfortable.

Intelligent Charger
The socket on the battery case makes it easy for charging without having to take the battery out, meaning fast charging during breaks in operations.

Portable Lithium Battery
6kg/13.2 lbs weight only, 20 seconds quick change, 2 years warranty.

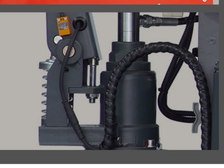

Tidy and Clear Harness
The electric pallet truck's harness is highly simplified, and the non professional person can also repair.

Reinforced Forks
Laser cutting, High Strength, Easier entrance/exit design for pallet, also for double pallet.

Load Rollers
High performance polyurethane load rollers, for quiet running and better grip. Single load rollers are option.

Unique operating interface
Integral design of key switch and emergence stop. Safety and easy to operate.

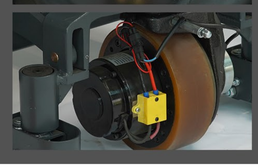

Reliable Drive Unit
High quality motor, USA origin CURTIS controller and robust drive wheel.